Woodwarm Stoves

Fireview 9kw ***Multi Fuel***

High Curved Canopy

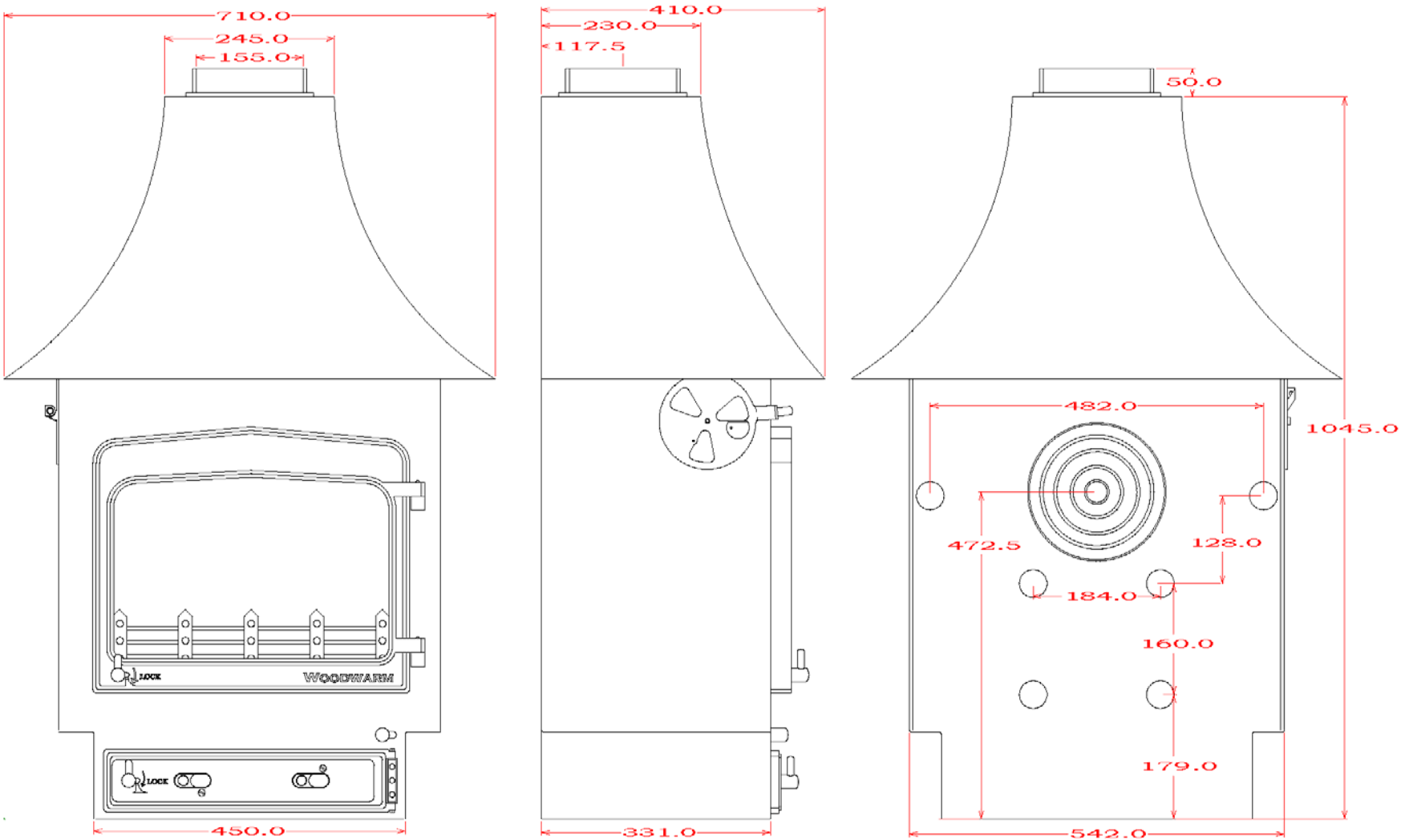

Maximum Log Length:- 430mm

Efficiency:- 78.5% Wood - 74.7% Ancit

Boilers in Range:- 8,000 btu`s (7kw Heat left to room) 20,000 btu`s (5.9kw Heat left to room) 30,000 btu`s (4.5kw Heat left to room)

Max Boiler Available with Roof Boiler:- 42,000 btu`s (2.2kw Heat left to room)

Property of Metal Developments Ltd © 2009 e&oe